SPLIT TYPE ROOM AIR CONDITIONER

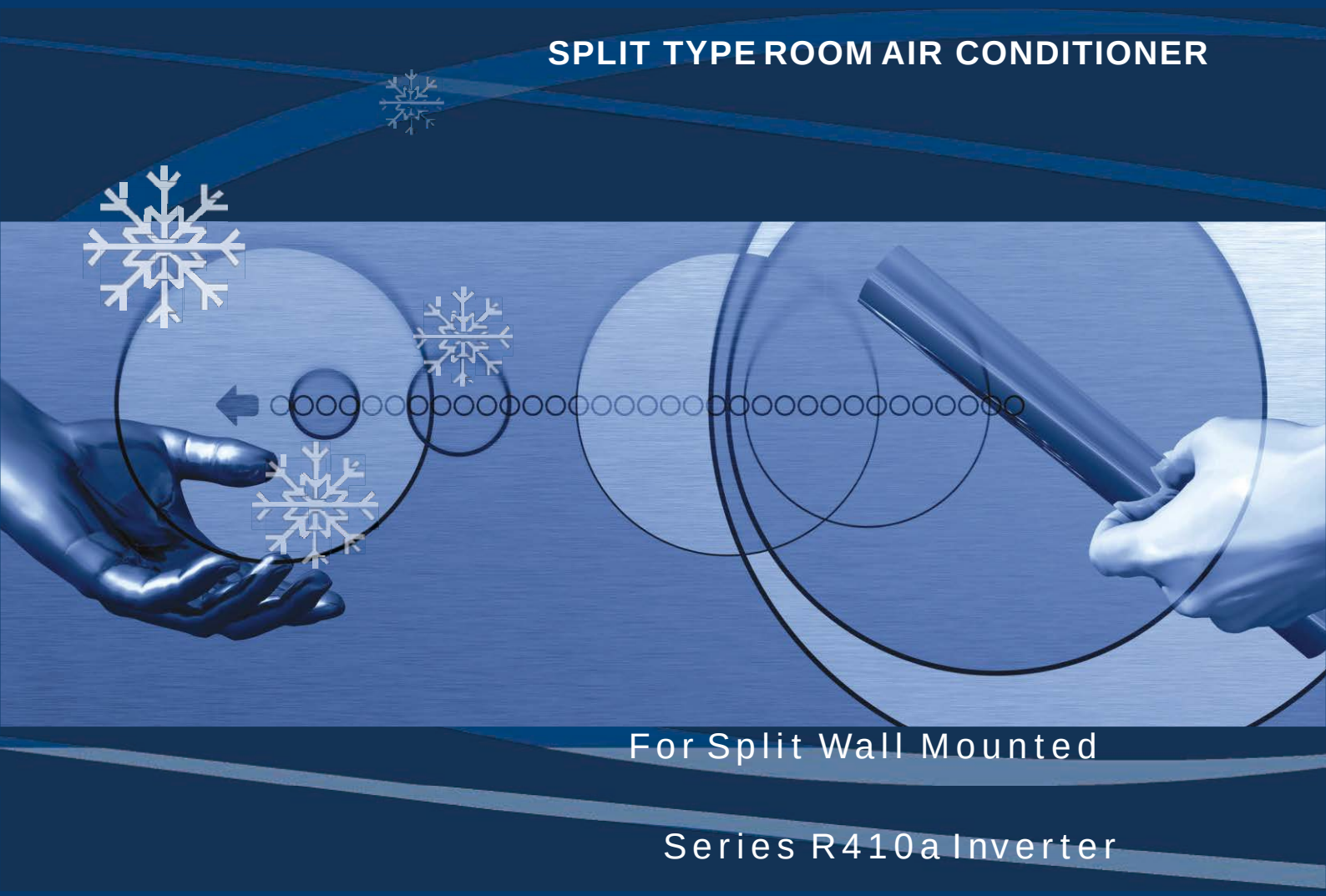

For Split Wall Mounted

Series R410a Inverter

9000BTU
12000BTU
18000BTU
24000BTU

Service Manual

CONTENTS

Refrigeration Diagram.....1
Troubleshooting Guide.....4

Chapter 1 Refrigeration Diagrams

1.1 Cooling Only

Cooling Mode

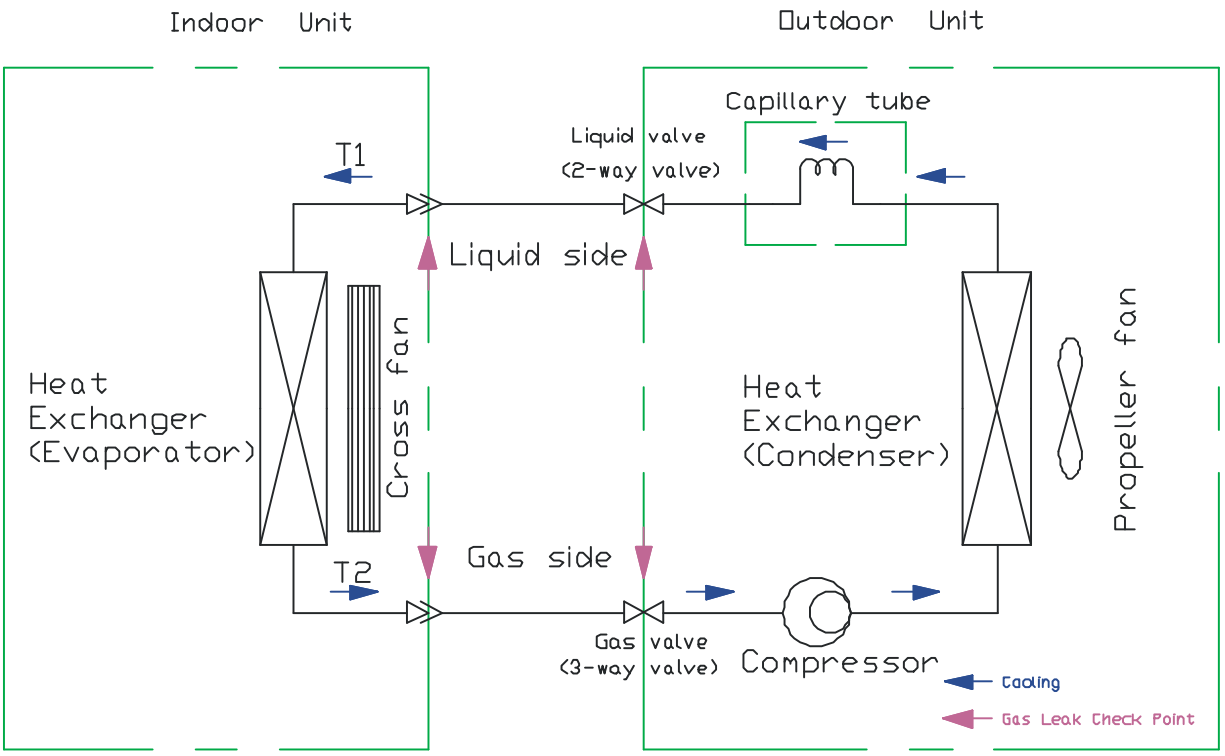

Cooling Cycle

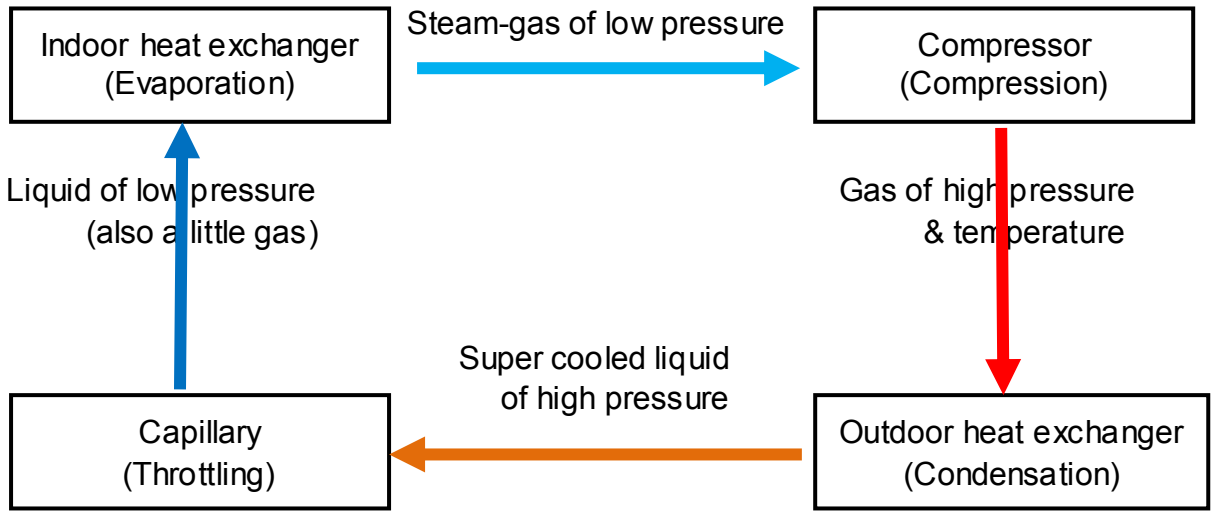

1.2 Cooling & Heating

Cooling Mode

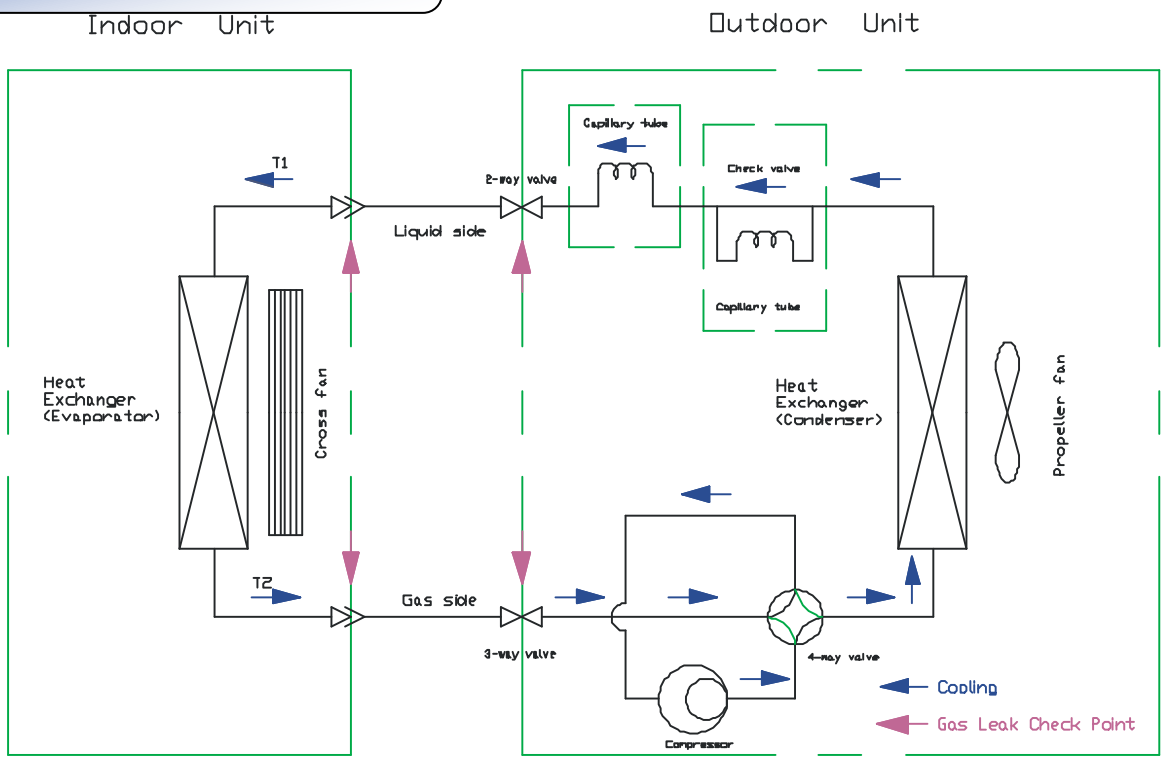

Cooling Cycle

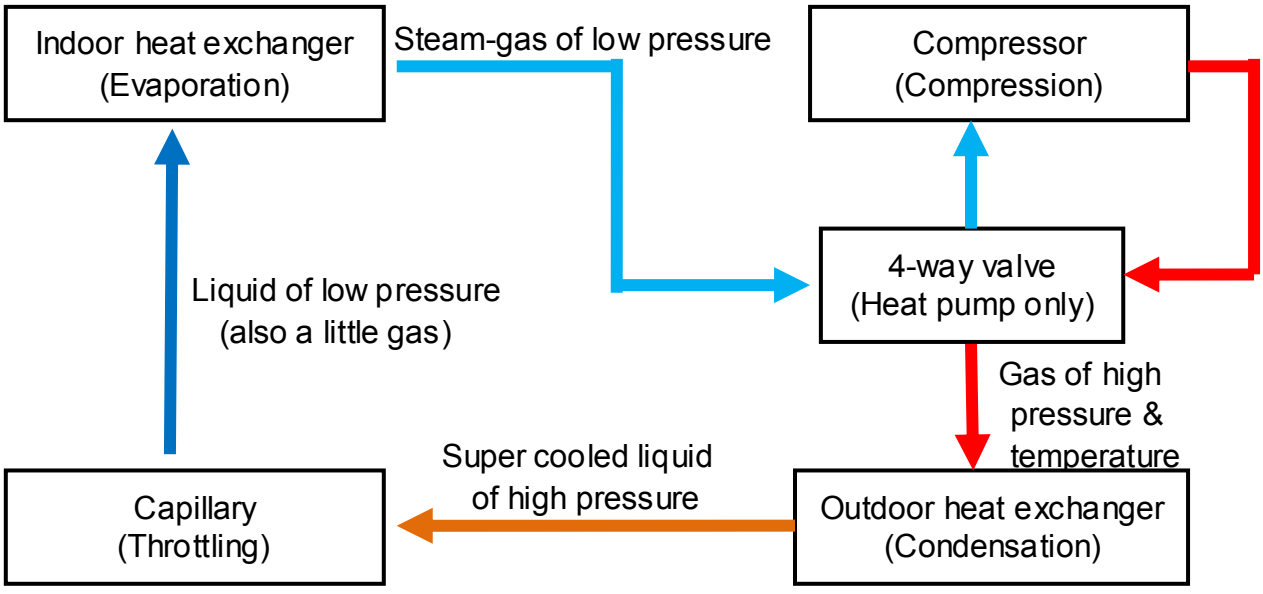

Heating Mode

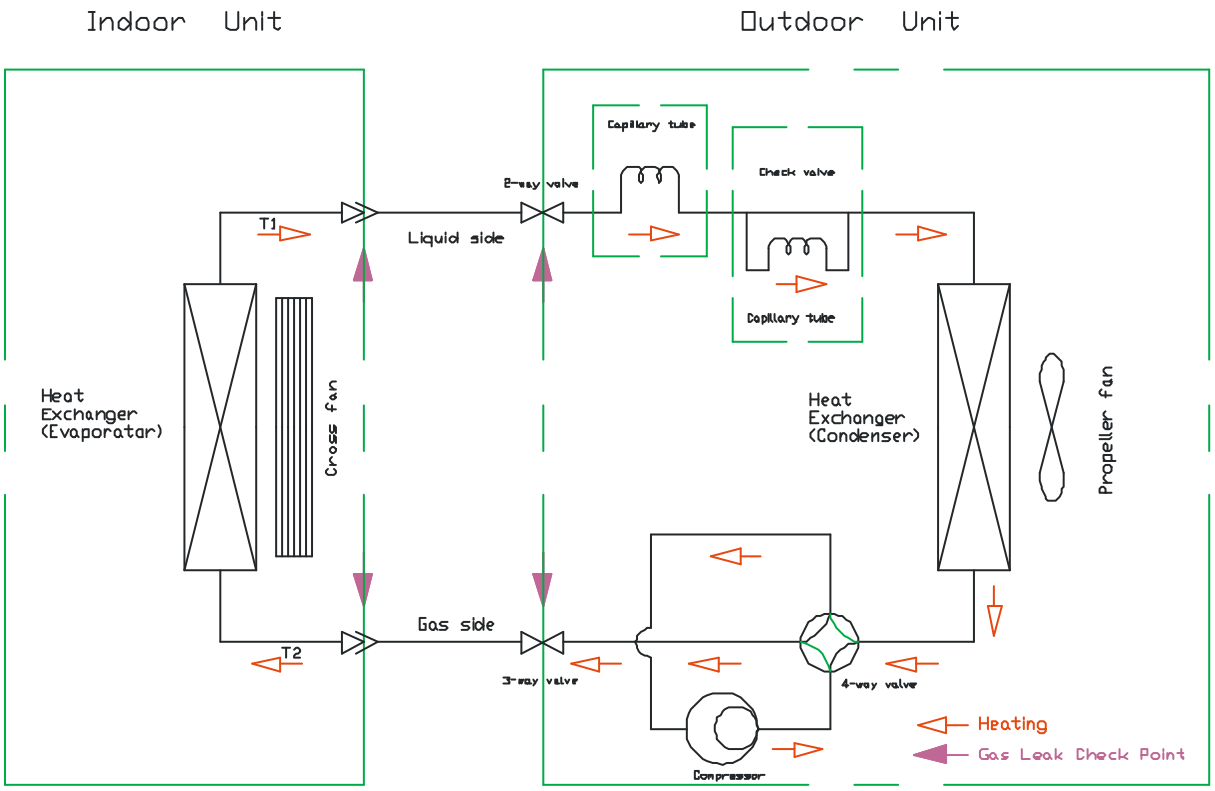

Heating Cycle

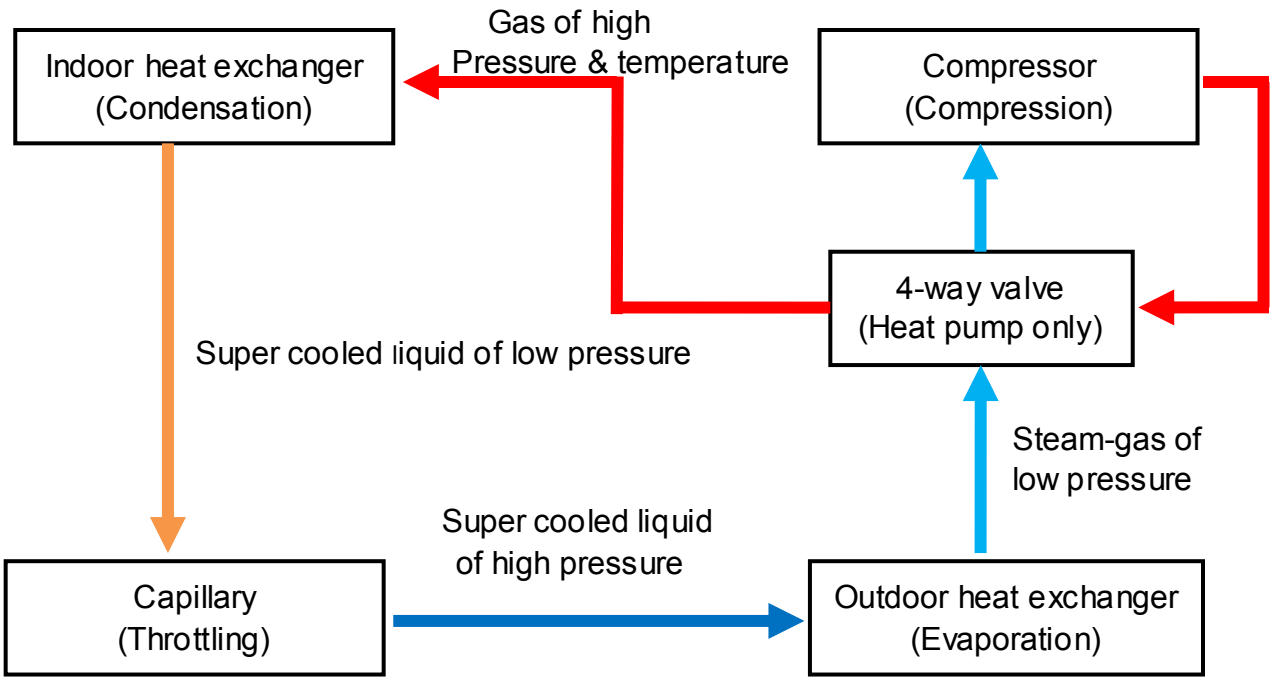

Chapter 2 Troubleshooting Guide

2.1 Error Code

No.	Error Code	Problem
1	E1	Room temperature sensor fault
2	E2	Outdoor coil temperature sensor fault
3	E3	Indoor coil temperature sensor fault
4	E4	Indoor fan motor or DC motor feedback fault
5	E5	Indoor & outdoor communication fault
6	F0	Outdoor DC Fan motor fault
7	F1	IPM modular fault
8	F2	PFC modular fault
9	F3	Compressor operation fault
10	F4	Exhaust Temperature sensor fault
11	F5	Compressor top cover protection
12	F6	Outdoor ambient temp sensor fault
13	F7	Over/under voltage protection
14	F8	Outdoor modular communication fault
15	F9	Outdoor E^2PROM fault
16	FA	Suction temperature sensor fault (4-way valve swich failure)

2.2 Troubleshooting Guide

1. The Foremost Inspecting Items

⑴The input voltage must be within +10% tolerance of the rated Voltage. If it is not the case, the air-conditioner will probably not work normally.

⑵Check the connecting cord between indoor unit and outdoor unit to see if it is properly connected. The connecting must be done according to the wiring diagram, please also notice that even different models may have the connecting cord of the same specification.

Please check if the marks at the connecting terminal and the marks on the cord can match, otherwise, the air-conditioner will not work normally.

⑶If the following phenomena are found, the problem is not from the air-conditioner itself.

NO.	Problems	Causes
1	The motor is heard operating but the air-conditioner dose not work when the indoor unit is powered on	Since the air-conditioner is powered on, it will come to working condition as long as you press the ON/OFF button of the remote control and the Signal is well received.
2	The compressor stops running but the indoor fan motor keeps working when it is at cooling mode with the indoor temperature higher than set temperature.	If you turn off the air-conditioner and restart it immediately, it will return to normal in 3 minutes, after that, the air-conditioner will automatically adjust the indoor fan speed to what you set.
3	The compressor works discontinuously at dehumidifying mode.	The air-conditioner will automatically control the working of the compressor according to the inside temperature
4	The air-conditioner does not work while the LED display is on.	The TIMER is set with the air-conditioner; it will be in hold on condition. If the TIMER setting is cancelled, the air-conditioner will return to normal working condition
5	The compressor works discontinuously at cooling and dehumidifying mode, and the indoor fan motor slows down.	The compressor stops internally or the fan motor slows down to prevent the indoor heat exchanger from being frozen.

2. No Power Display

⑴Items

a) Check if the input voltage is correct?

b) Check if the AC power supply connecting is correct?

c) Check if the output voltage of the manostat L7805 (IC2) is correct?

⑵Trouble shooting procedure

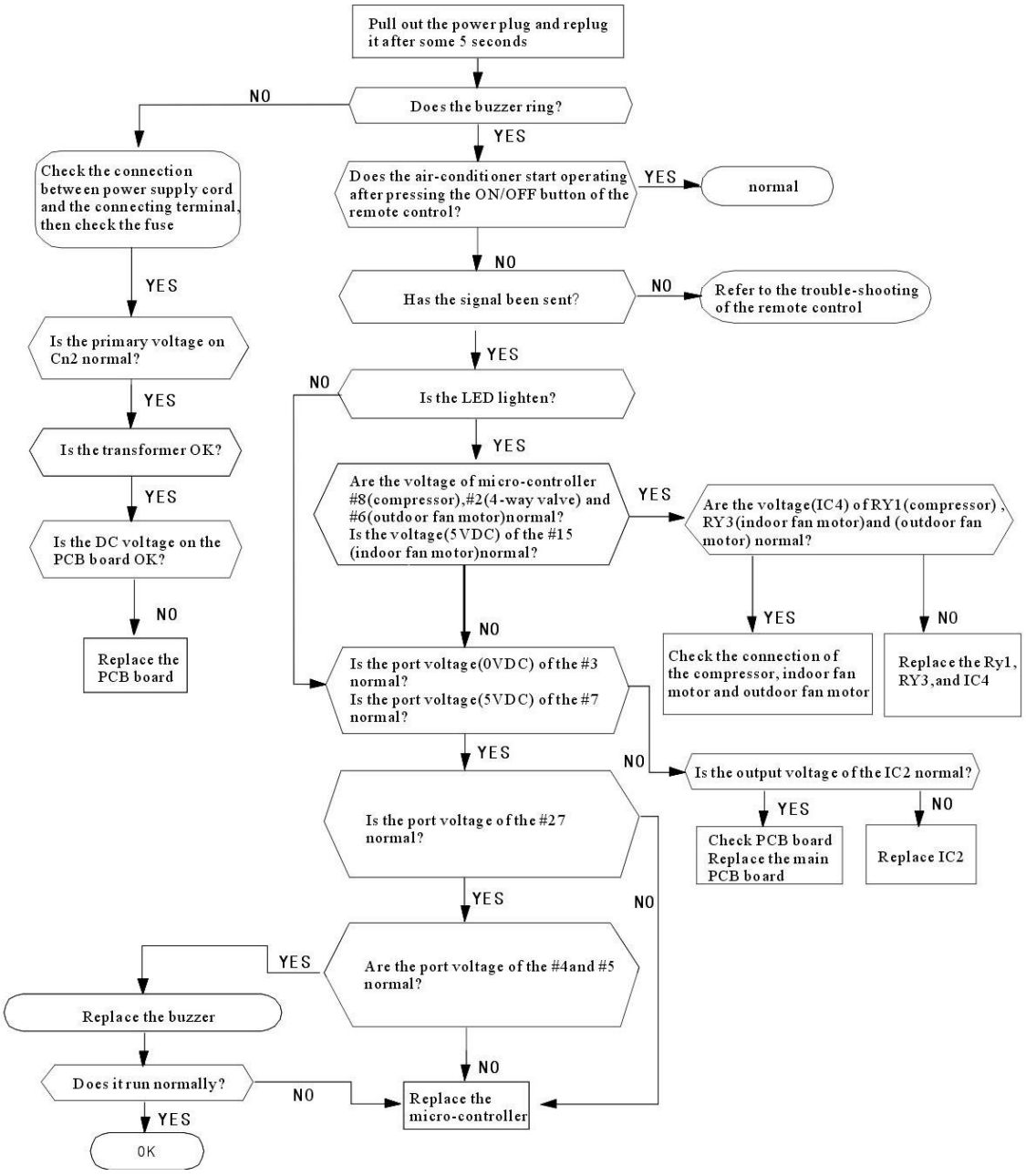

3. The Indoor Fan Motor Does Not Work

⑴Items

a) Check if the indoor fan motor is connected correctly to the connector (CN8)?

b) Check if the AC input voltage is correct?

c) Check if the IC of indoor fan motor is connected correctly to the connector (CN2)?

d) Check if the capacity of indoor fan motor is connected correctly to the connector (CN8)?

⑵Trouble shooting procedure

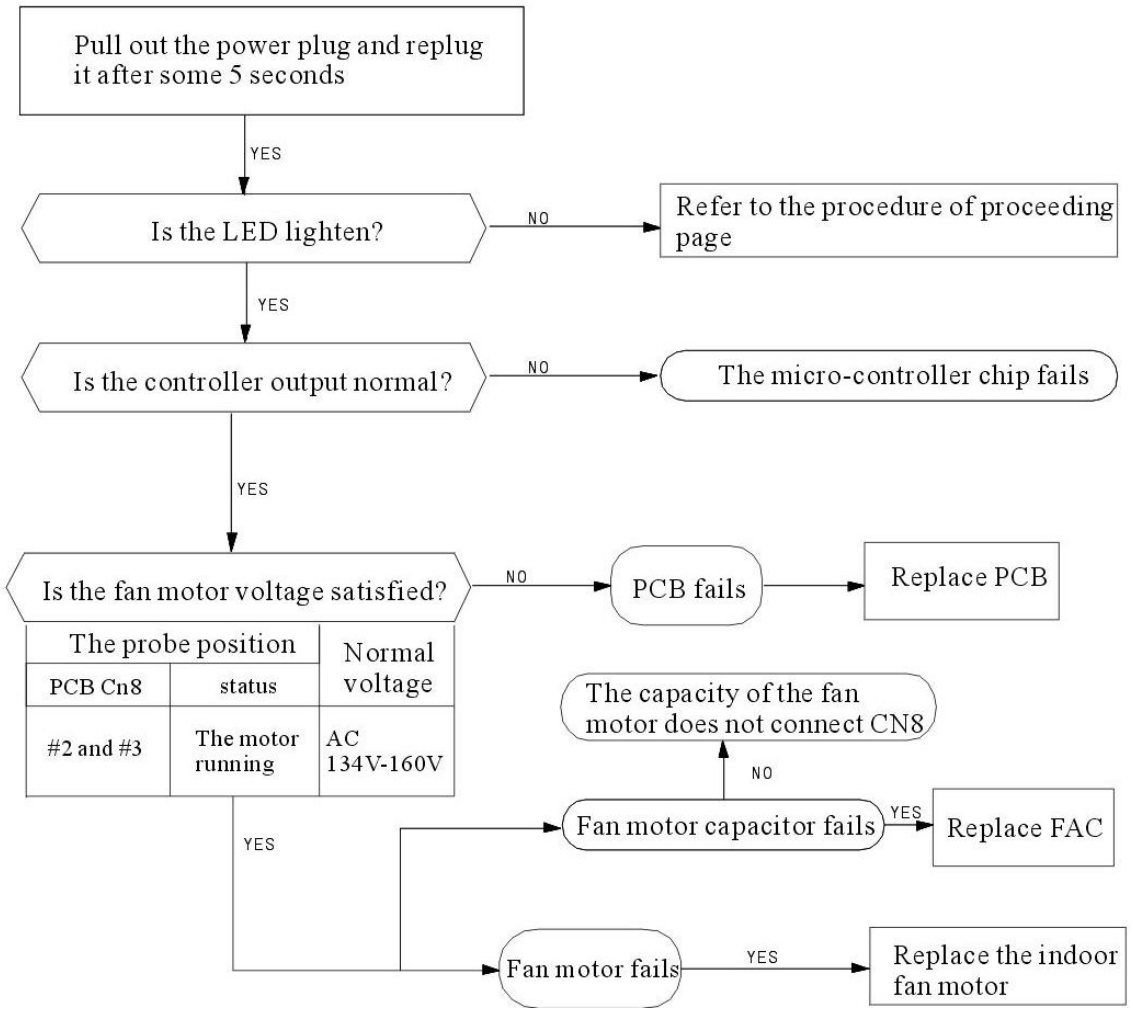

4. The Outdoor Unit Does Not Work

(1)Items

a) Check if the input voltage is correct?

b) Check if the wire connection of the outdoor connecting terminal is correct?

(2)Trouble shooting procedure

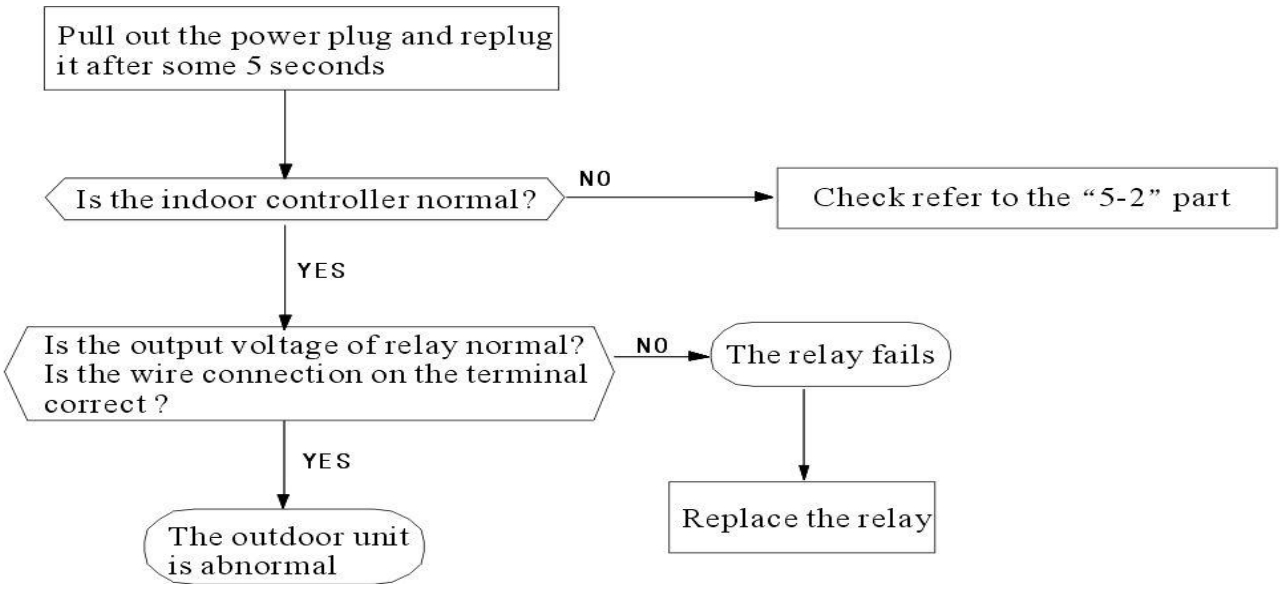

5. The Step Motor Does Not Work

⑴Items

a) Check if the input voltage is correct?

b) Check if the step motor controlling the up-down movement firmly connected to Cn2?

⑵Trouble shooting procedure

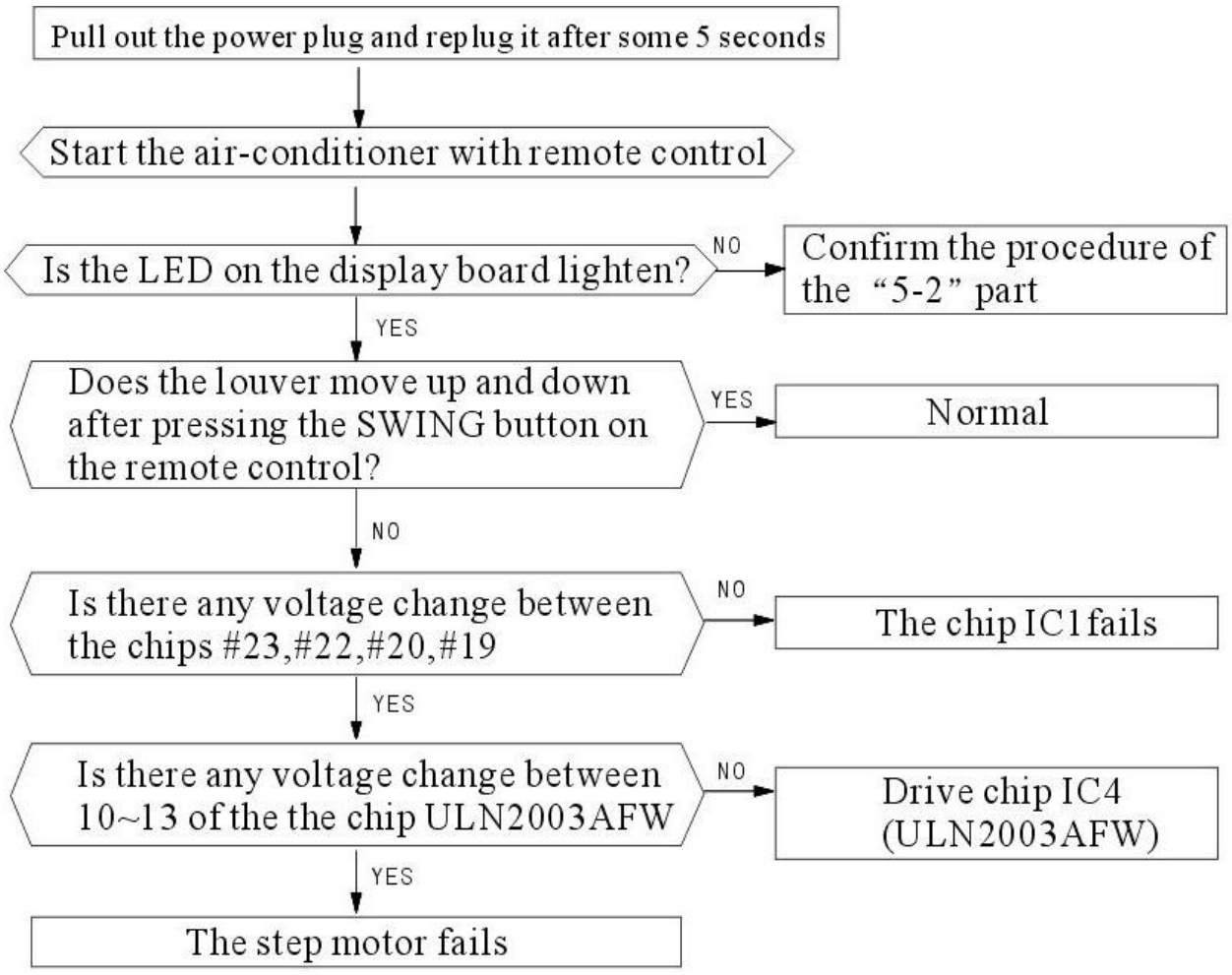

6. Heating Mode Can Work, But No Hot Air Blow

⑴Check if the set temperature is lower than the indoor temperature?

⑵Check if the indoor PCB is connected to the terminal correctly?

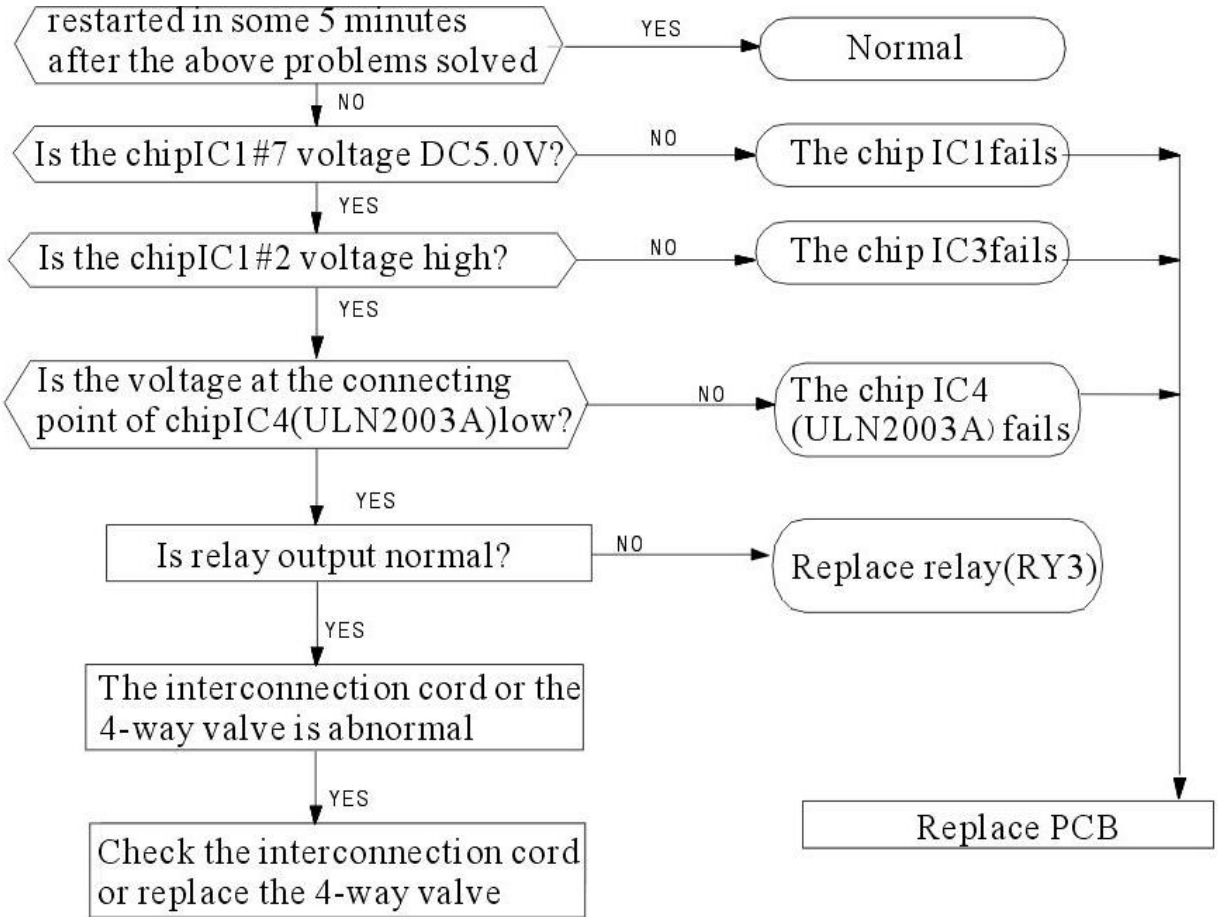

7. Remote Control Can Not Work

Trouble shooting rocedure

